lamber

Lavaoggetti
Lave-ustensiles
Ware-washing machine
Zübehöre-Spüler
Lavaperolas

Ed.
07/2006

Rev. B

LP31-L

PARTI DI RICAMBIO
PIECES DETACHEES
SPARE PARTS
ERSATZTEILE
REPUESTOS

PLATINSERVICE
Tel. 0200-34-41
www.platinservice.com

CE

lamber	LAVAGGIO INFERIORE - LAVAGE INFERIEUR LOWER WASHING - UNTERER WASCHROHR LAVADO INFERIOR	MOD. **LP31-L**	TAV. **1 B** ED. 07/2006

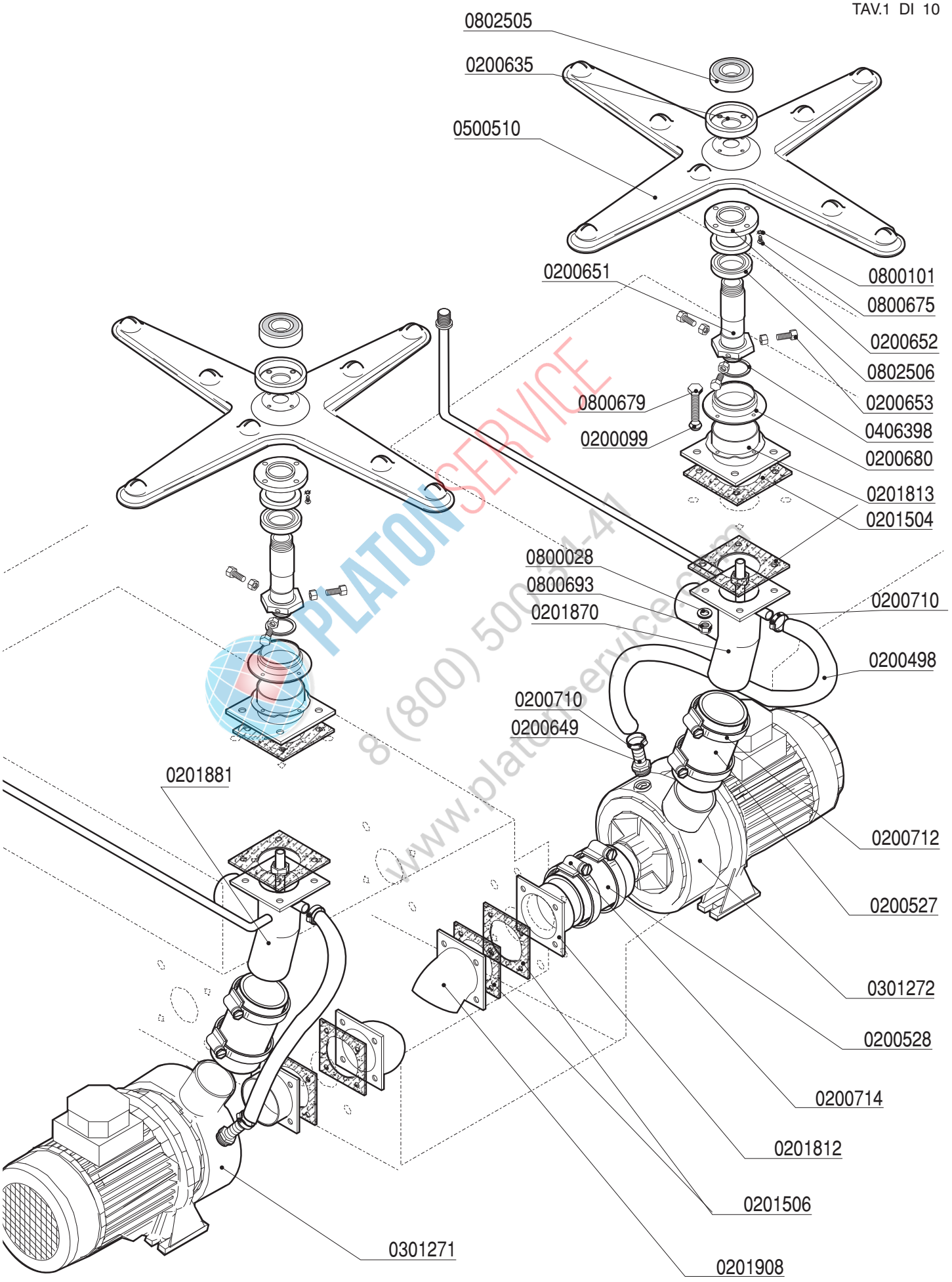

PLATON SERVICE
8 (800) 500-11-41
www.platonservice.com

lamber	LAVAGGIO SUPERIORE - LAVAGE SUPERIEUR UPPER WASHING - OBERER WASCHROHR LAVADO SUPERIOR	MOD. **LP31-L**	TAV. **2 B** ED. 07/2006

TAV. 2 DI 10

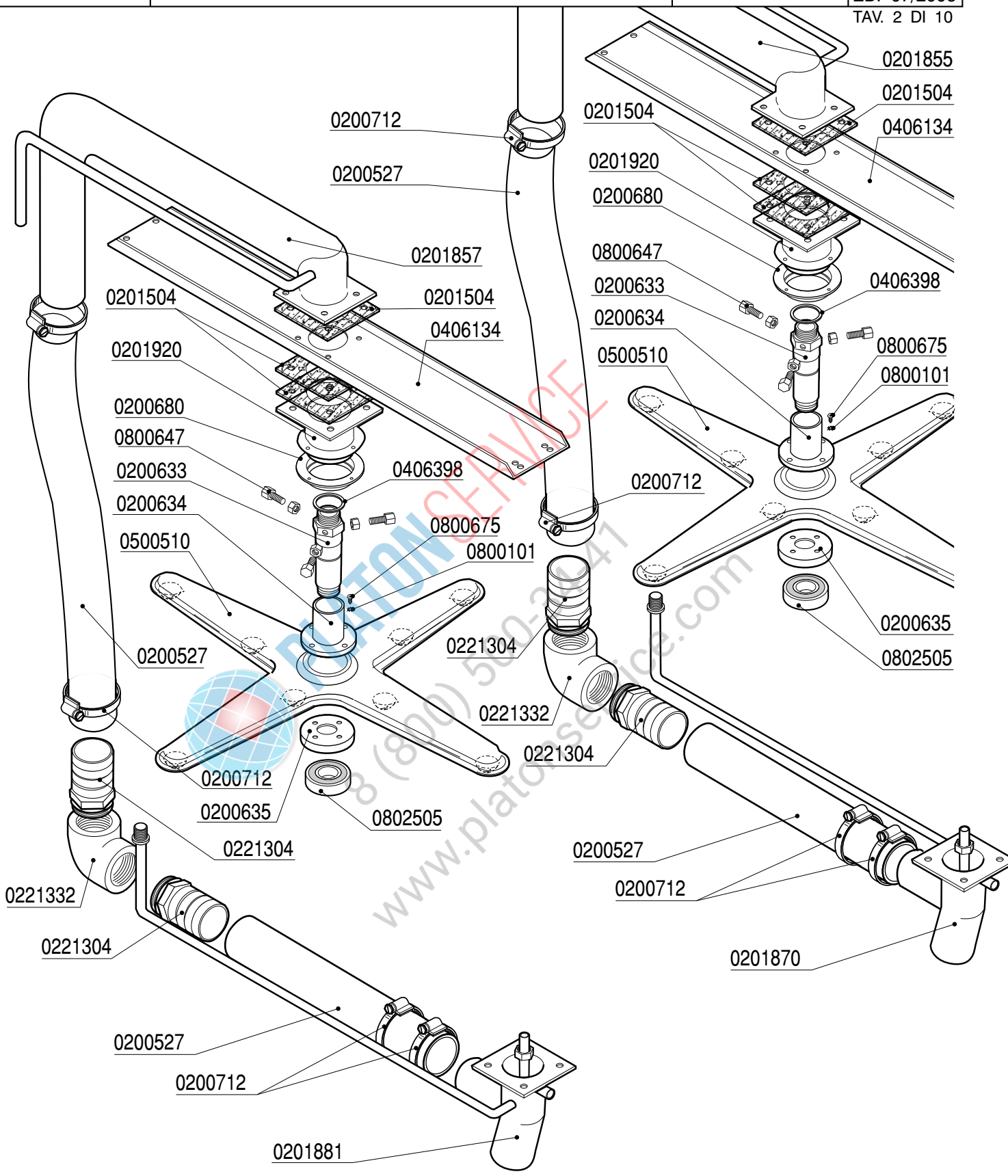

PLATONSERVICE
8 (800) 500-31-41
www.platonservice.com

lamber	VASCA LAVAGGIO - CUVE LAVAGE WASH TANK - WASCHTANKROHR - GRUPO CUBA	MOD. **LP31-L**	TAV. **3 B** ED. 07/2006

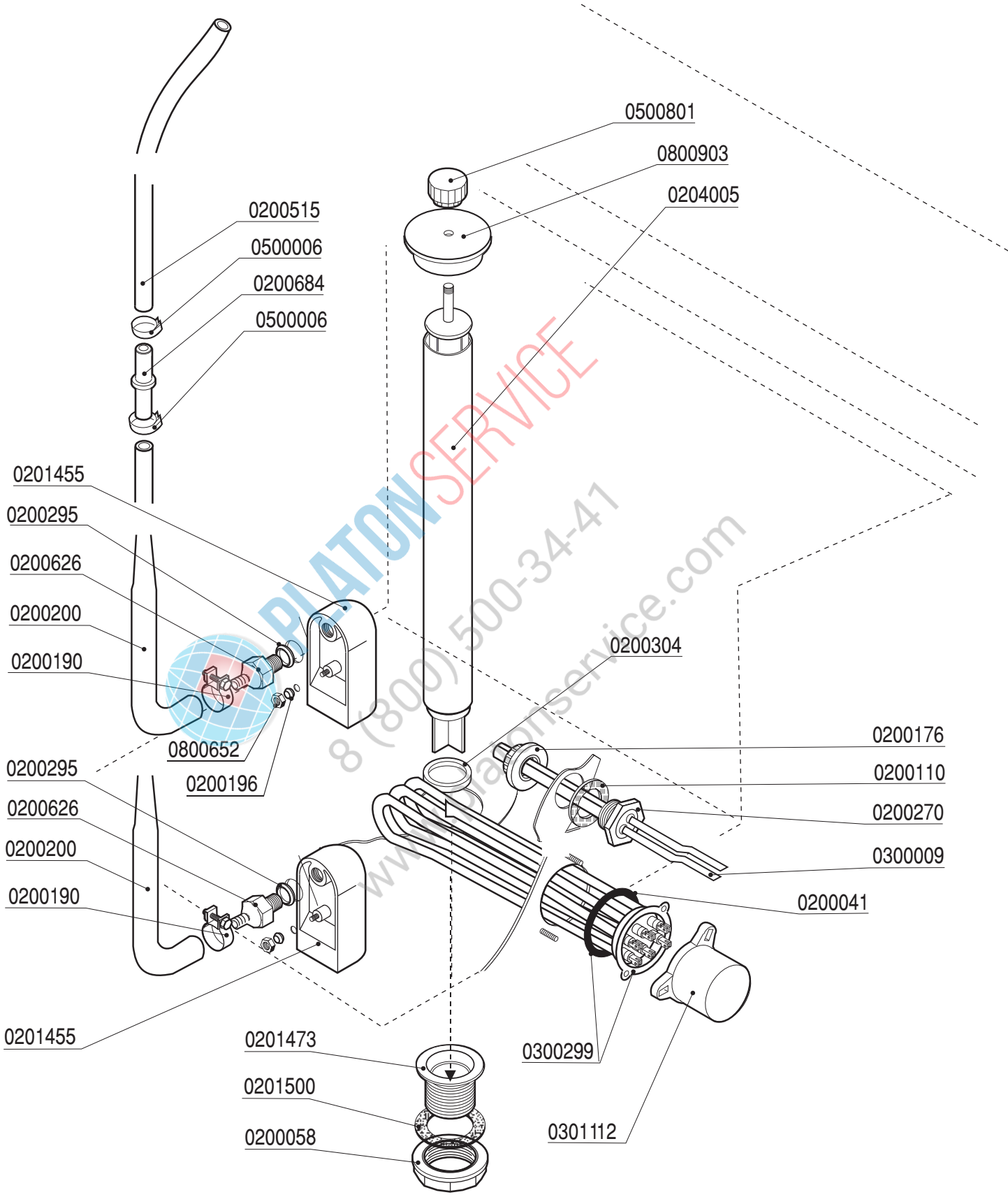

PLATONSERVICE
8 (800) 500-34-41
www.platonservice.com

lamber	GRUPPO RISCIACQUO - COMPOSANTS RINCAGE RINSE COMPONENTS - NACHSPÜLROHR ACLARADO	MOD. **LP31-L**	TAV. **4 B** ED.07/2006

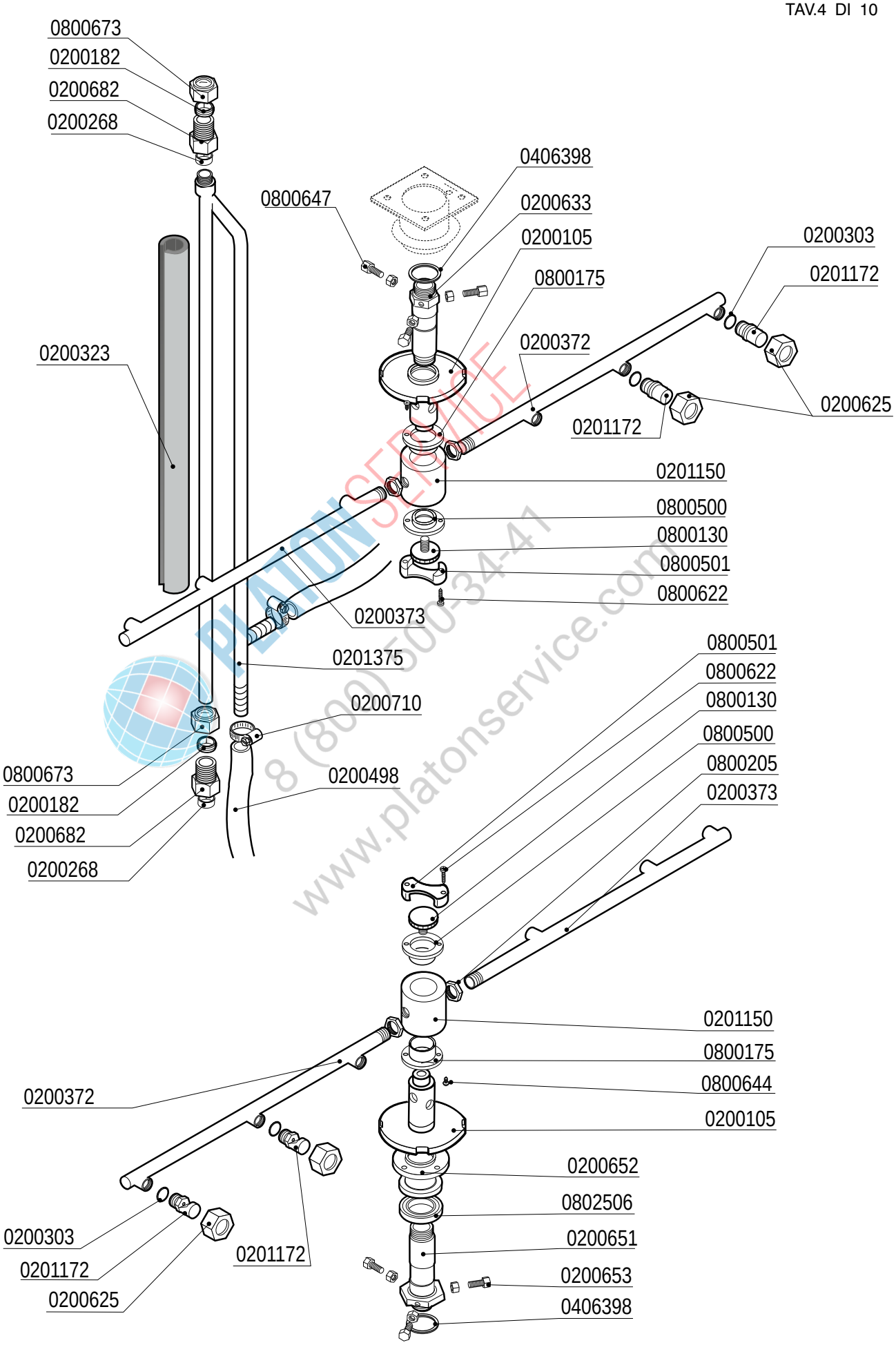

PLATON SERVICE
8 (800) 500-34-41
www.platonservice.com

lamber	GRUPPO BOILER DISTRIBUZIONE ACQUA SURCHAUFFEUR - BOILER - BOILER	MOD. **LP31-L**	TAV. **5 B** ED. 07/2006

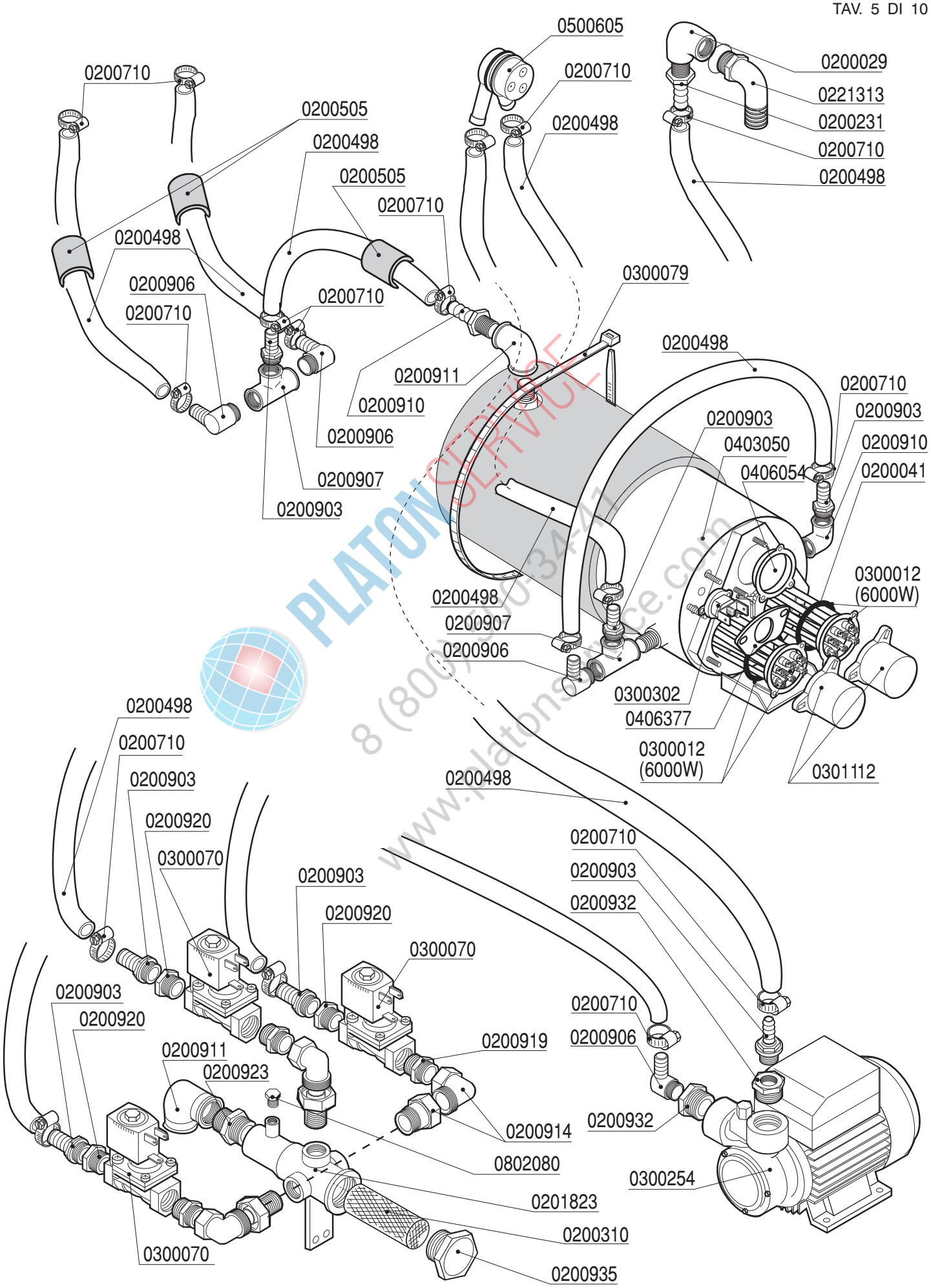

PLATONSERVICE
8 (800) 550-34-47
www.platonservice.com

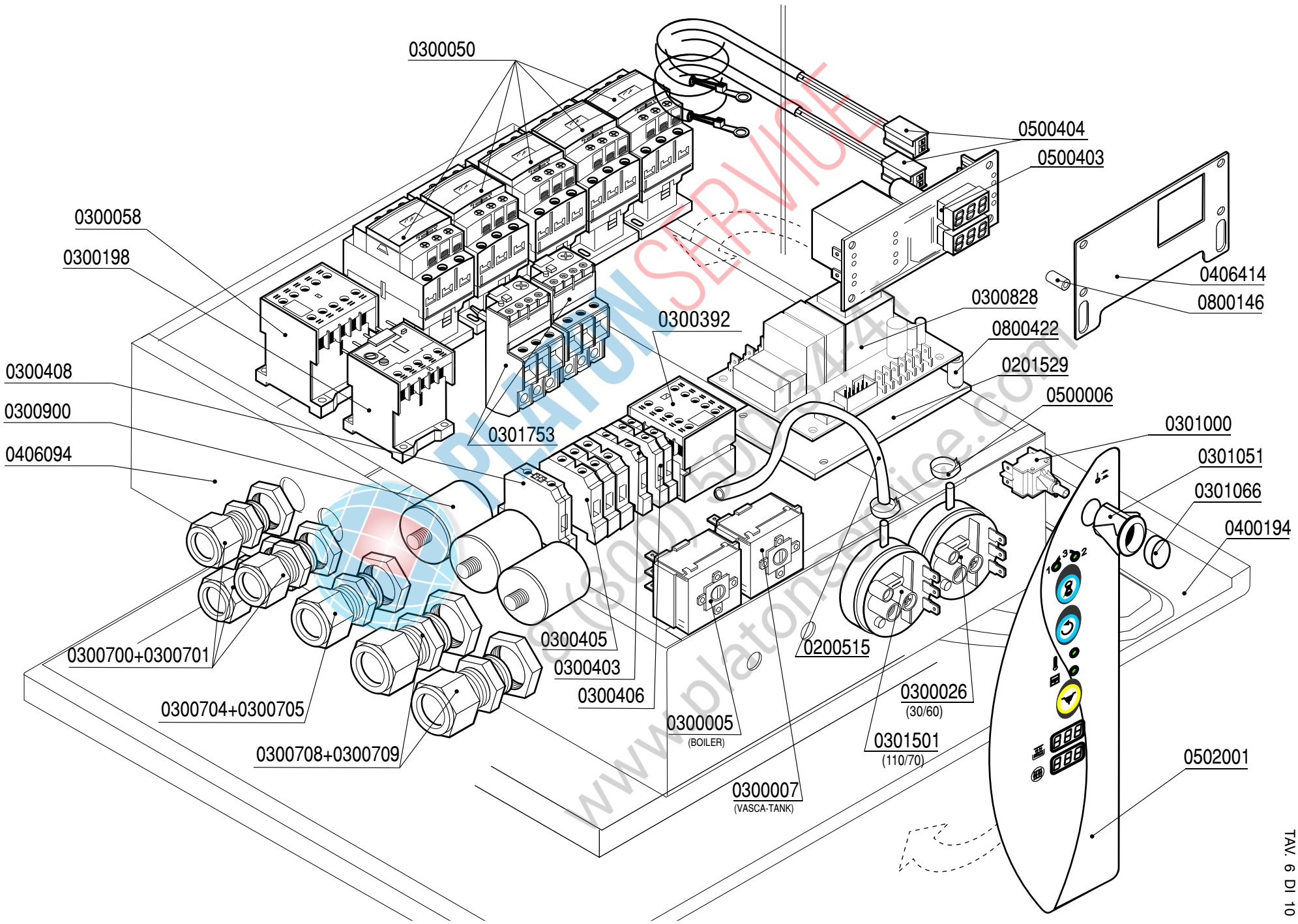

PLATONSERVICE
0800 500 344
www.platonservice.com

lamber

QUADRO ELETTRICO - TABLEAU ELECTRIQUE
CONTROL BOX - SCHALT-TAFEL - CAJA ELÉCTRICA

MOD. LP31-L

TAV. 6 B

ED. 07/2006

TAV. 6 DI 10

lamber	SPORTELLO - PORTE DOOR - TÜR - PUERTA	MOD. **LP31-L**	TAV. **7 B** ED. 07/2006

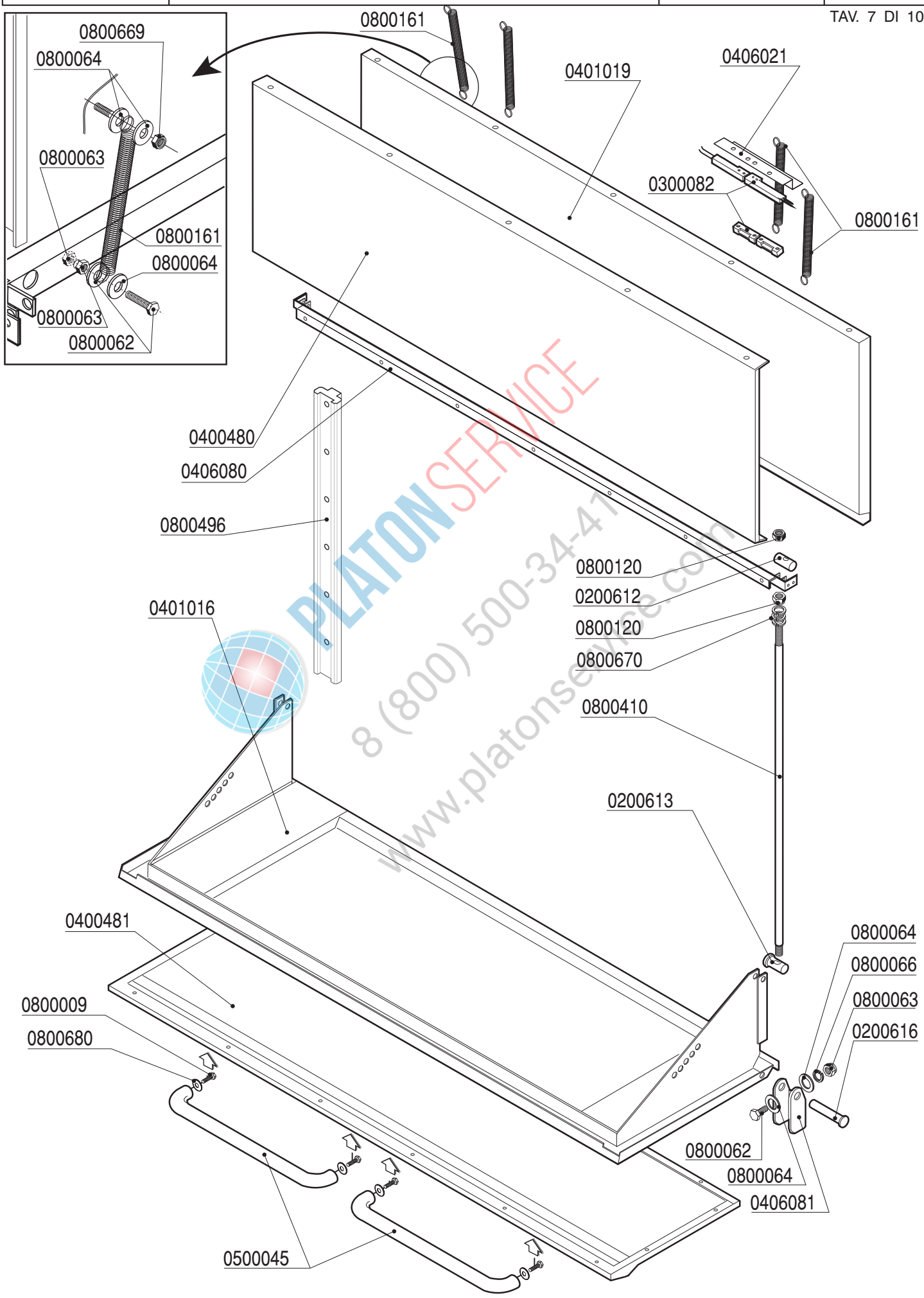

PLATONSERVICE
8 (800) 500-34-41
www.platonservice.com

lamber	GUIDE E FILTRI - GLISSIERE ET FILTRES SLIDE AND FILTERS - KORBFÜHRUNG UND FILTER GUÍA CESTO Y FILTRO	MOD. **LP31-L**	TAV. **8 B** ED. 07/2006

TAV. 8 DI 10

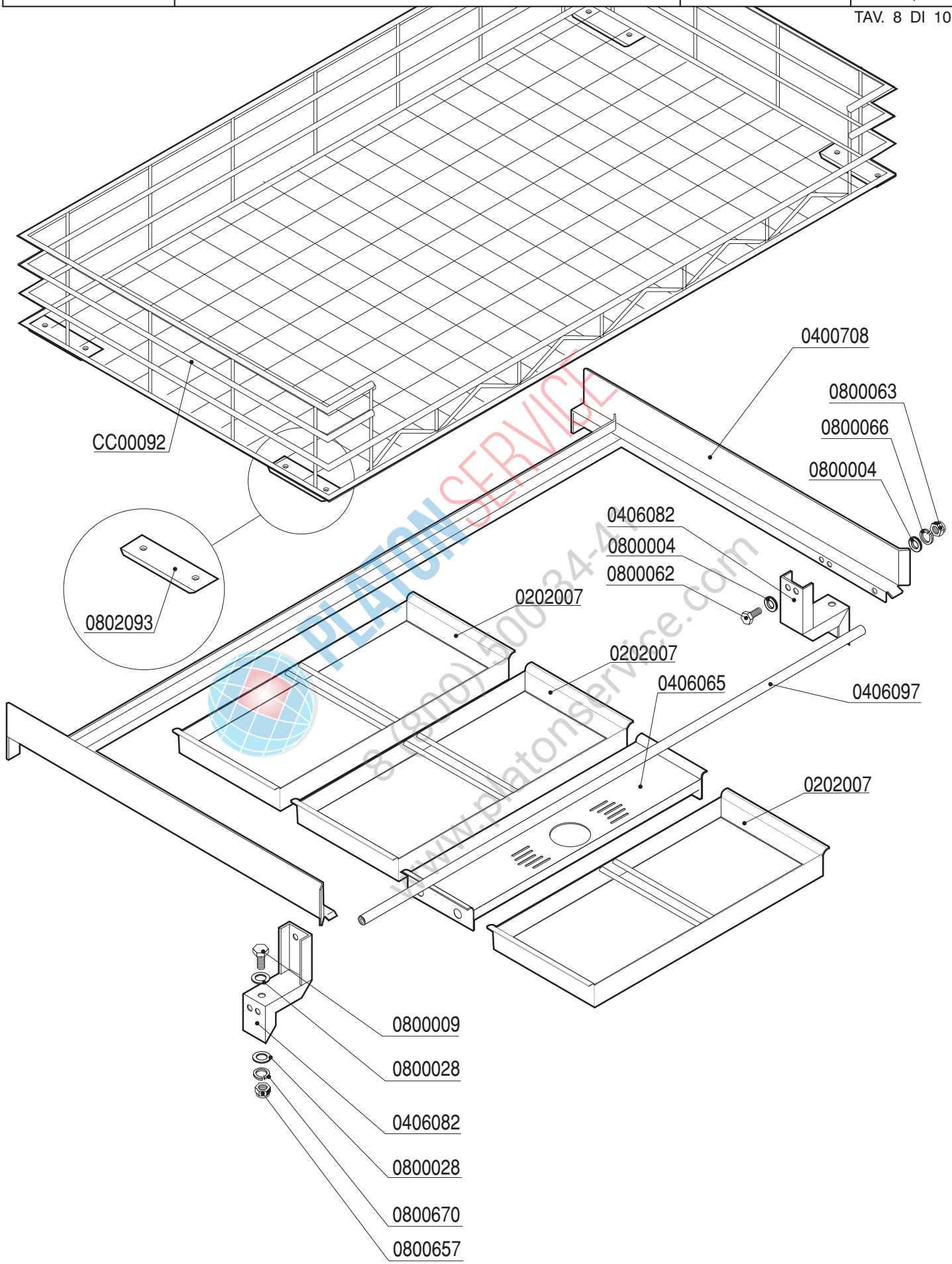

PLATONSERVICE
8 (800) 500-34-47
www.platonservice.com

lamber	BASAMENTO - SOCLE BASE - SOCKEL - BASAMENTO	MOD. **LP31-L**	TAV. **9 D** ED. 07/2006

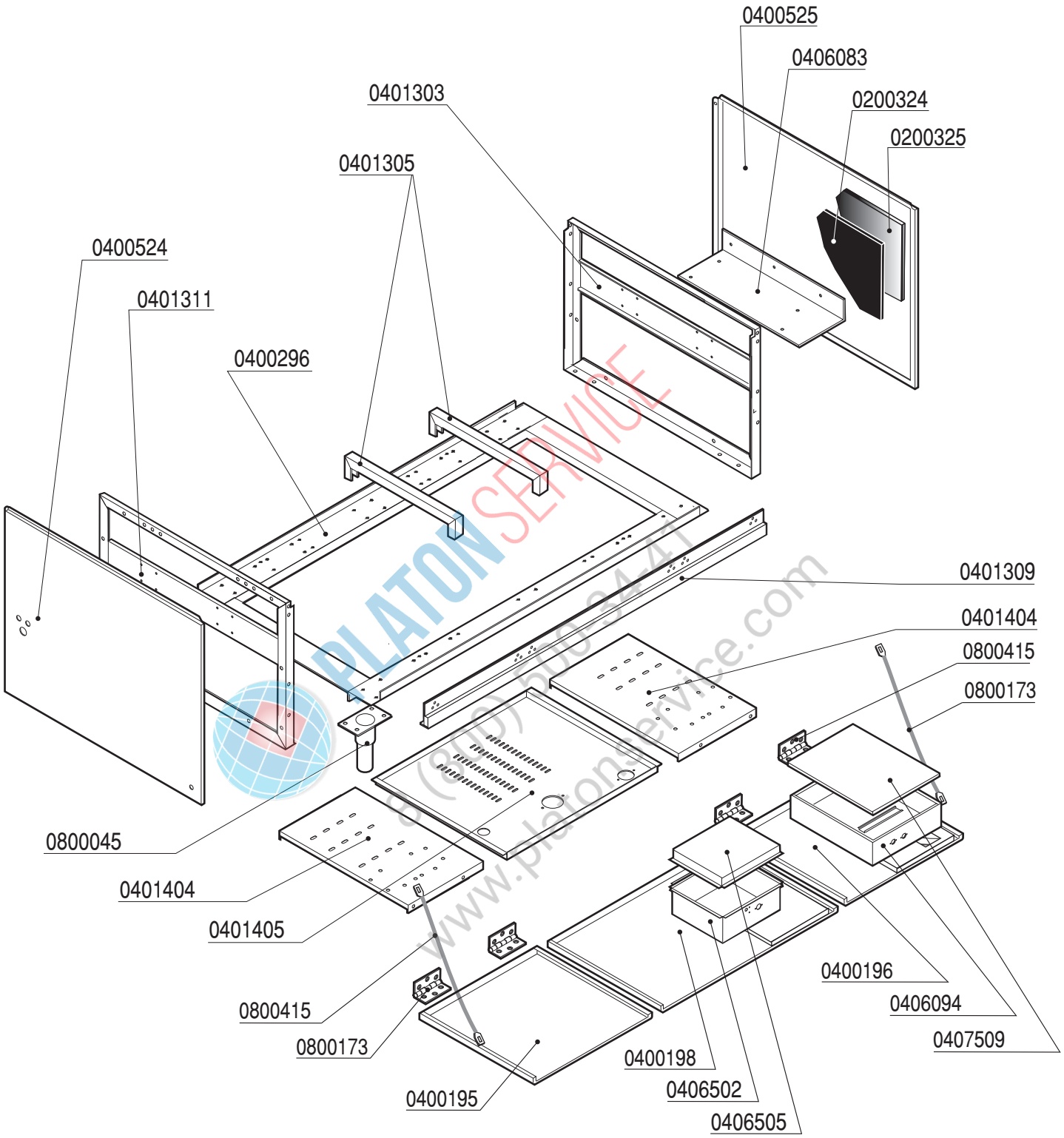

PLATON SERVICE
+7 (812) 325 94 41
www.platonservice.com

lamber	CARROZZERIA CAPOTTA - CARROSSERIE CAPOTE HOOD - KARROSSERIE HAUBE - CARROCERÍA	MOD. **LP31-L**	TAV. **10 B** ED. 07/2006

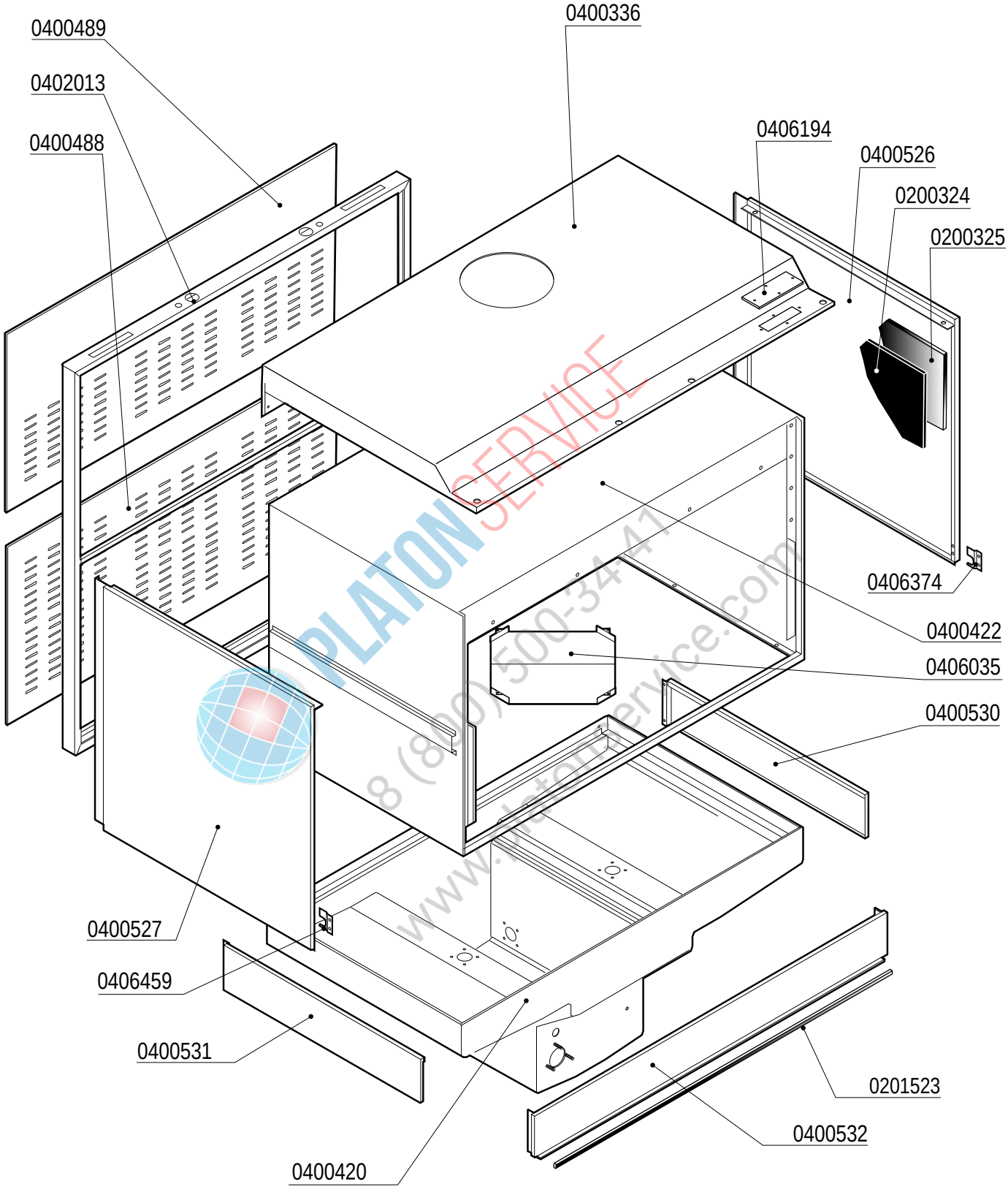

PLATON SERVICE
8 (800) 500-34-41
www.platonservice.com